Dual P-Channel Enhancement Mode MOSFET

Features

- -20V/-3.1A
  - $R_{DS(ON)}$=75mΩ(max.)@V_{GS}=-4.5V
  - $R_{DS(ON)}$=115mΩ(max.)@V_{GS}=-2.5V
  - $R_{DS(ON)}$=180mΩ(max.)@V_{GS}=-1.8V
- 100% UIS + R_g Tested
- ESD Protection
- Reliable and Rugged
- Lead Free and Green Devices Available (RoHS Compliant)

Applications

- Power Management in Portable Equipment , Battery Powered Systems.

Pin Description

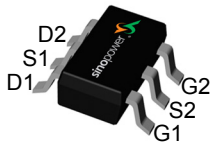

SOT-23-6

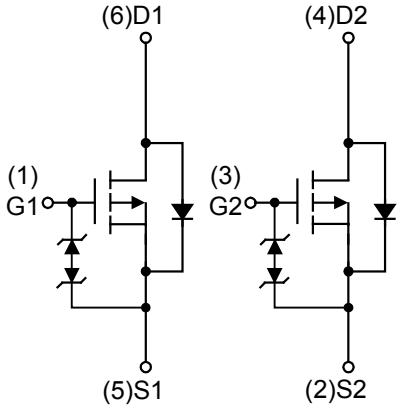

P-Channel MOSFET

Ordering and Marking Information

SM2622BS □□-□□ □ Assembly Material Handling Code Temperature Range Package Code	Package Code C : SOT-23-6 Operating Junction Temperature Range C : -55 to 150 °C Handling Code TR : Tape & Reel Assembly Material G : Halogen and Lead Free Device
SM2622BS C : Q22XX	XX - Lot Code

Note : SINOPOWER lead-free products contain molding compounds/die attach materials and 100% matte tin plate termination finish; which are fully compliant with RoHS. SINOPOWER lead-free products meet or exceed the leadfree requirements of IPC/JEDEC J-STD-020D for MSL classification at lead-free peak reflow temperature. SINOPOWER defines “Green” to mean lead-free (RoHS compliant) and halogen free (Br or Cl does not exceed 900ppm by weight in homogeneous material and total of Br and Cl does not exceed 1500ppm by weight).

SINOPOWER reserves the right to make changes to improve reliability or manufacturability without notice, and advise customers to obtain the latest version of relevant information to verify before placing orders.

Absolute Maximum Ratings (T_A=25°C Unless Otherwise Noted)

Symbol	Parameter		Rating	Unit
Common Ratings				
V_{DSS}	Drain-Source Voltage		-20	V
V_{GSS}	Gate-Source Voltage		±12	
T_J	Maximum Junction Temperature		150	°C
T_{STG}	Storage Temperature Range		-55 to 150	
I_S	Diode Continuous Forward Current	T_A=25°C	-1	A
I_D	Continuous Drain Current	T_A=25°C	-3.1	A
		T_A=70°C	-2.5	
I_{DM} [a]	Pulsed Drain Current	T_A=25°C	-12.4	
P_D [b]	Maximum Power Dissipation	T_A=25°C	1	W
		T_A=70°C	0.64	
$R_{\theta JA}$ [b]	Thermal Resistance-Junction to Ambient	t ≤ 10s	90	°C/W
		Steady state	125	
I_{AS} [c]	Avalanche Current, Single pulse	L=0.1mH	9.6	A
E_{AS} [c]	Avalanche Energy, Single pulse	L=0.1mH	4.6	mJ

Note a：Pulse width limited by max. junction temperature.
Note b：Surface mounted on 1in^2 pad area, steady state t = 999s.
Note c：UIS tested and pulse width limited by maximum junction temperature 150°C (initial temperature T_J=25°C).

Copyright © Sinopower Semiconductor Inc.

Electrical Characteristics (T_A = 25°C unless otherwise noted)

Symbol	Parameter	Test Conditions	Min.	Typ.	Max.	Unit
Static Characteristics						
BV_{DSS}	Drain-Source Breakdown Voltage	V_{GS}=0V, I_{DS}=-250μA	-20	-	-	V
I_{DSS}	Zero Gate Voltage Drain Current	V_{DS}=-16V, V_{GS}=0V	-	-	-1	μA
		T_J=85°C	-	-	-30	
$V_{GS(th)}$	Gate Threshold Voltage	V_{DS}=V_{GS}, I_{DS}=-250μA	-0.5	-0.7	-1	V
I_{GSS}	Gate Leakage Current	V_{GS}=±10V, V_{DS}=0V	-	-	±10	μA
$R_{DS(ON)}$ [d]	Drain-Source On-state Resistance	V_{GS}=-4.5V, I_{DS}=-2.8A	-	60	75	mΩ
		T_J=125°C	-	82	-	
		V_{GS}=-2.5V, I_{DS}=-2.1A	-	85	115	
		V_{GS}=-1.8V, I_{DS}=-1A	-	120	180	
Diode Characteristics [e]						
V_{SD} [d]	Diode Forward Voltage	I_{SD}=-1A, V_{GS}=0V	-	-0.7	-1.1	V
t_{rr}	Reverse Recovery Time	I_{SD}=-3.1A, dI_{SD}/dt=100A/μs	-	23	-	ns
Q_{rr}	Reverse Recovery Charge		-	6	-	nC
Dynamic Characteristics [e]						
R_G	Gate Resistance	V_{GS}=0V,V_{DS}=0V,F=1MHz	-	12	-	Ω
C_{iss}	Input Capacitance	V_{GS}=0V, V_{DS}=-10V, Frequency=1.0MHz	-	365	-	pF
C_{oss}	Output Capacitance		-	80	-	
C_{rss}	Reverse Transfer Capacitance		-	66	-	
$t_{d(ON)}$	Turn-on Delay Time	V_{DD}=-10V, R_L=10Ω, I_{DS}=-1A, V_{GEN}=-4.5V, R_G=6Ω	-	5.3	-	ns
t_r	Turn-on Rise Time		-	13.8	-	
$t_{d(OFF)}$	Turn-off Delay Time		-	36	-	
t_f	Turn-off Fall Time		-	23	-	
Gate Charge Characteristics [e]						
Q_g	Total Gate Charge	V_{DS}=-10V, V_{GS}=-4.5V, I_{DS}=-3.1A	-	4.7	-	nC
Q_{gth}	Threshold Gate Charge		-	0.2	-	
Q_{gs}	Gate-Source Charge		-	0.5	-	
Q_{gd}	Gate-Drain Charge		-	1.8	-	

Note d：Pulse test ; pulse width≤300μs, duty cycle≤2%.
Note e：Guaranteed by design, not subject to production testing.

Copyright © Sinopower Semiconductor Inc.

Typical Operating Characteristics

Power Dissipation

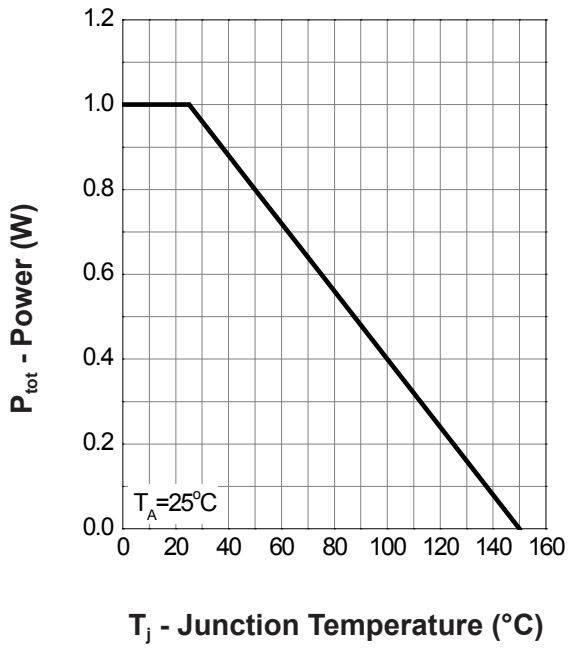

Drain Current

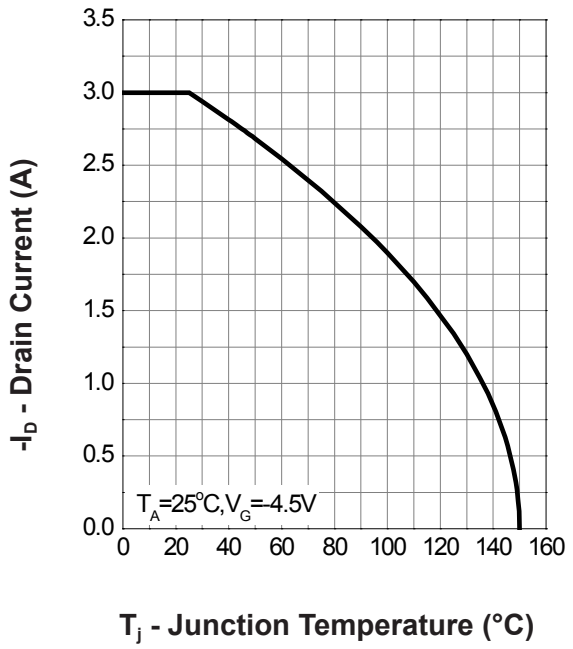

Safe Operation Area

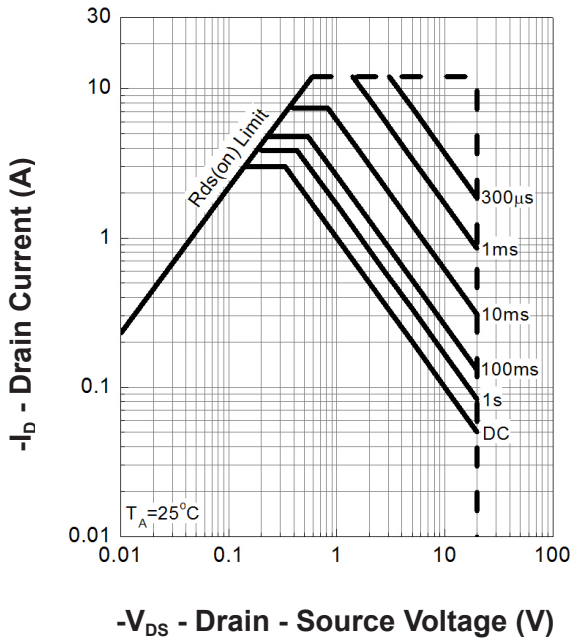

Thermal Transient Impedance

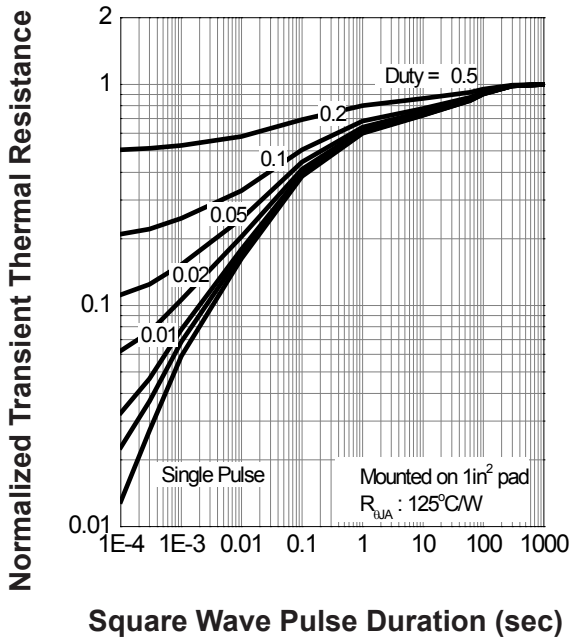

Copyright © Sinopower Semiconductor Inc.

Typical Operating Characteristics(Cont.)

Output Characteristics

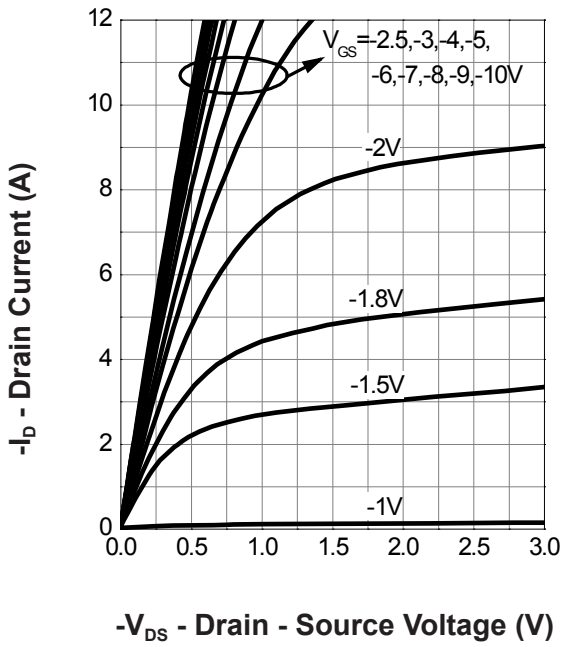

Drain-Source On Resistance

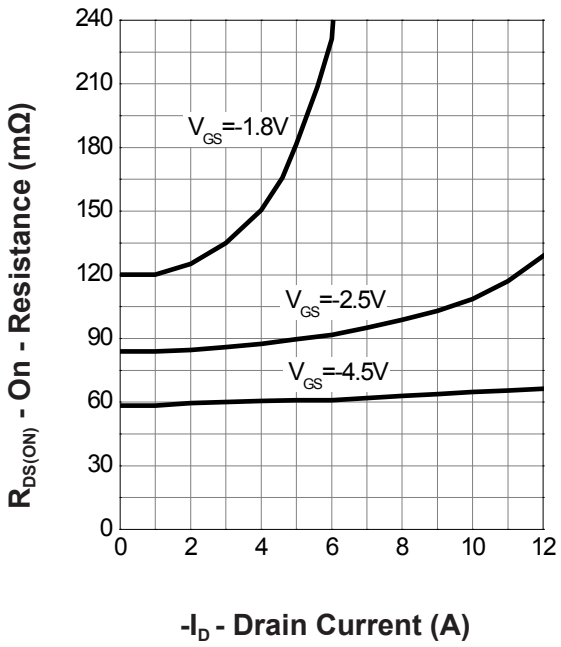

Gate-Source On Resistance

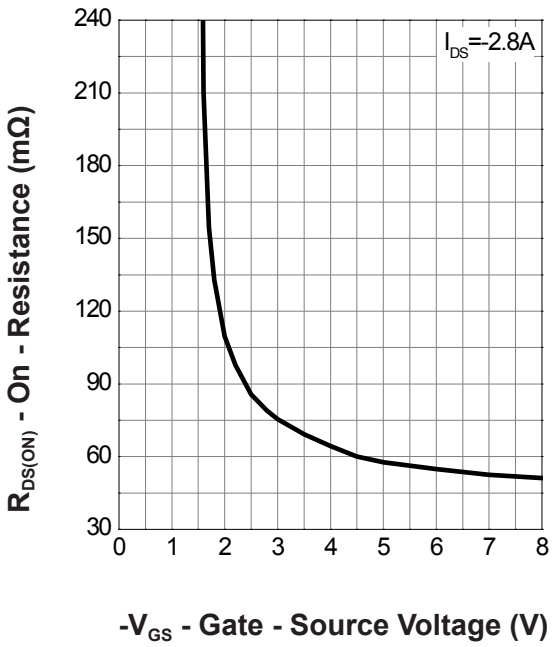

Gate Threshold Voltage

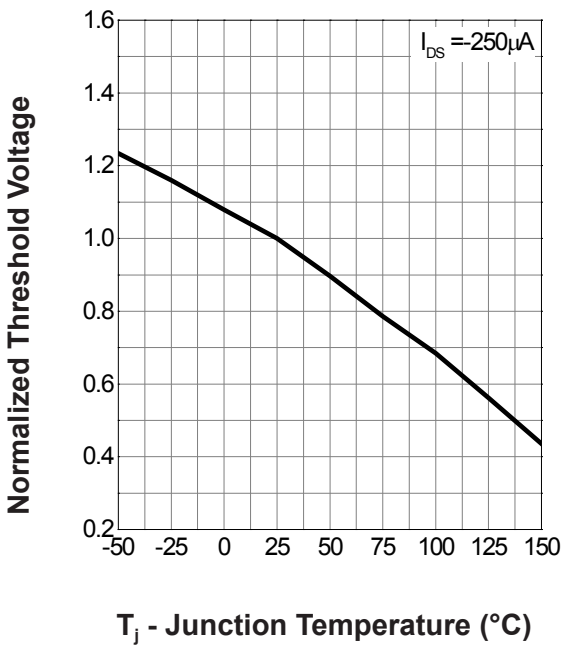

Copyright © Sinopower Semiconductor Inc.

Typical Operating Characteristics(Cont.)

Drain-Source On Resistance

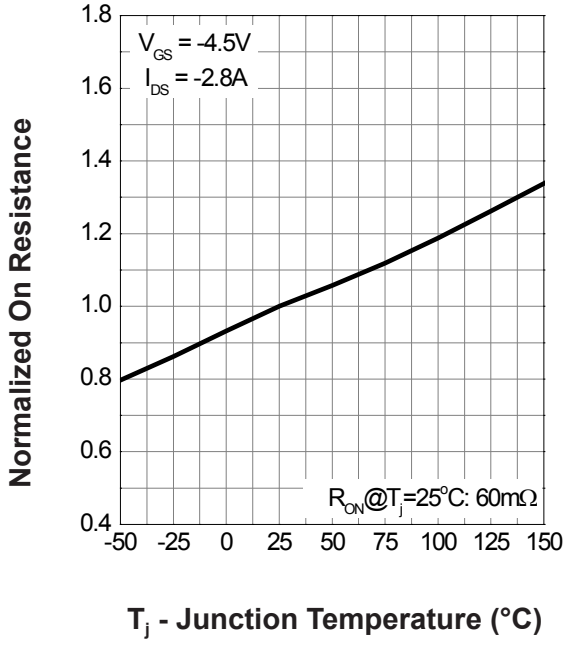

Source-Drain Diode Forward

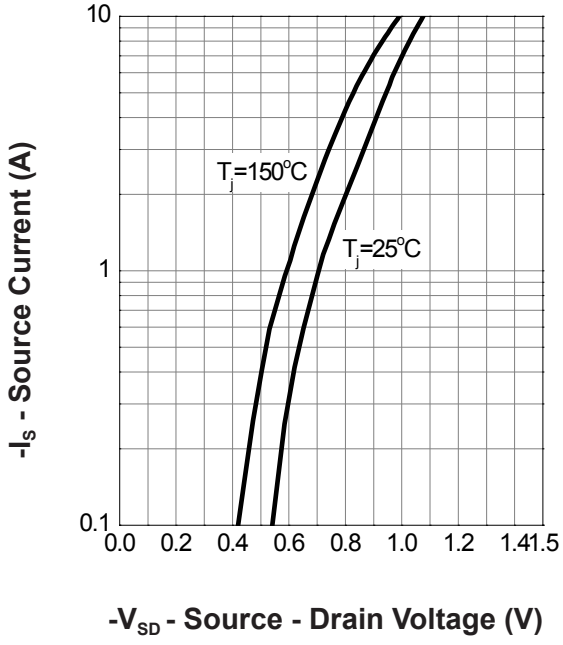

Capacitance

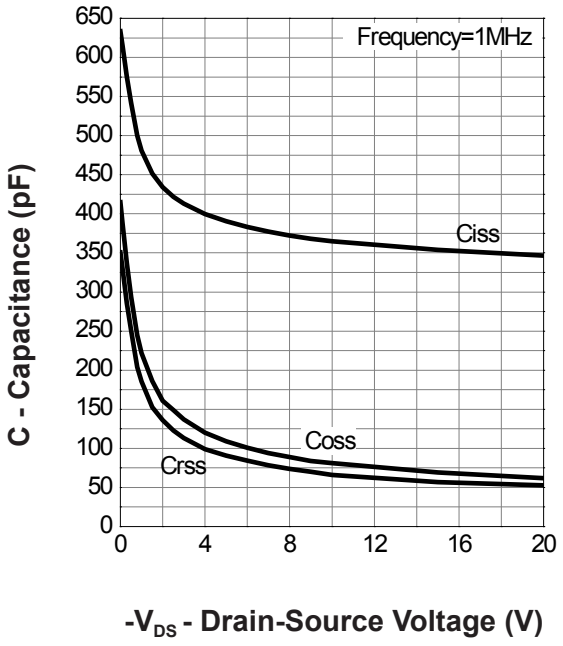

Gate Charge

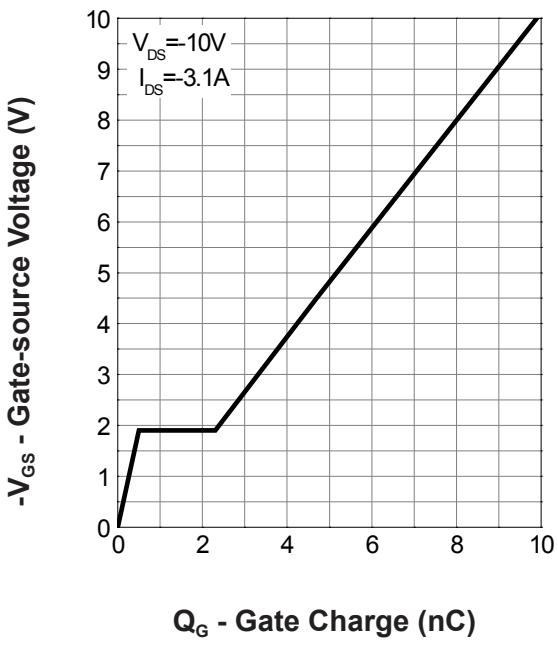

Copyright © Sinopower Semiconductor Inc.

Typical Operating Characteristics(Cont.)

Transfer Characteristics

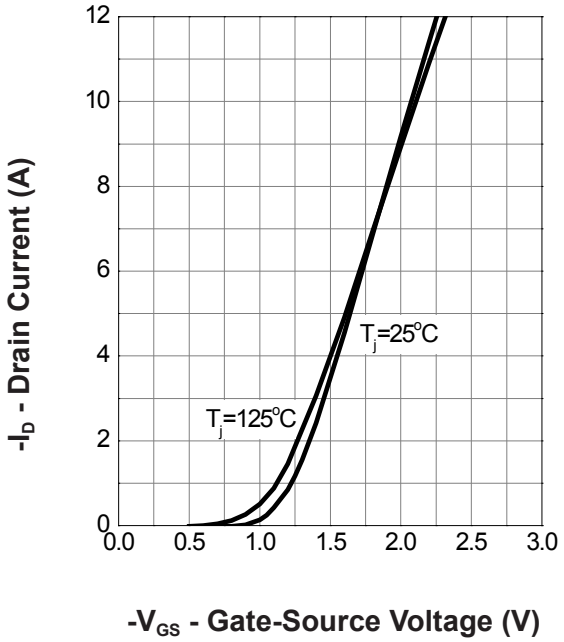

Avalanche Test Circuit and Waveforms

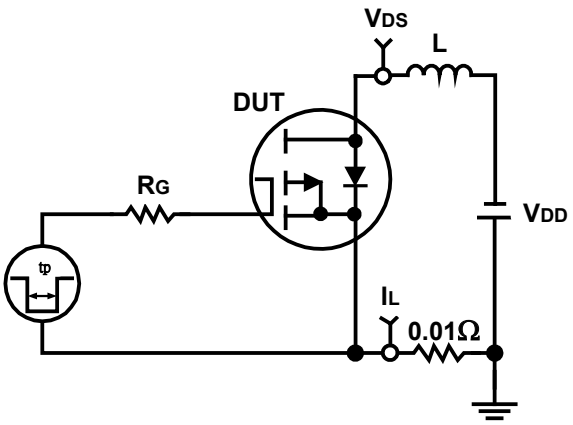

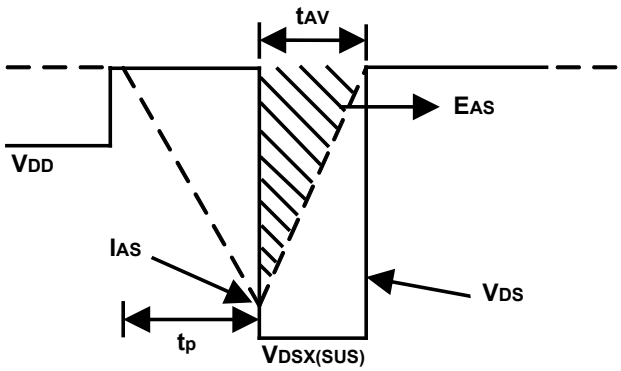

Switching Time Test Circuit and Waveforms

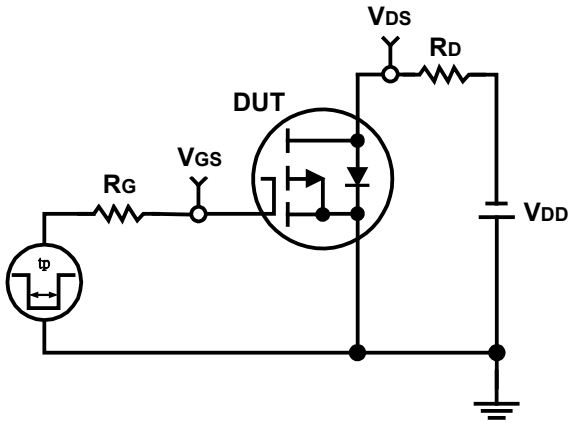

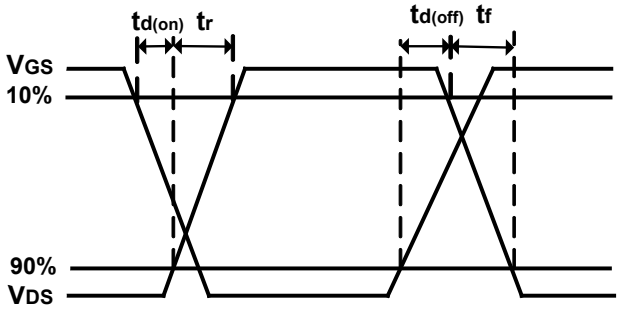

Copyright © Sinopower Semiconductor Inc.

Disclaimer

Sinopower Semiconductor Inc. (hereinafter “Sinopower”) has been making great efforts to development high quality and better performance products to satisfy all customers’ needs. However, a product may fail to meet customer’s expectation or malfunction for various situations.

All information which is shown in the datasheet is based on Sinopower’s research and development result, therefore, Sinopower shall reserve the right to adjust the content and monitor the production.

In order to unify the quality and performance, Sinopower has been following JEDEC while defines assembly rule. Notwithstanding all the suppliers basically follow the rule for each product, different processes may cause slightly different results.

The technical information specified herein is intended only to show the typical functions of and examples of application circuits for the products. Sinopower does not grant customers explicitly or implicitly, any license to use or exercise intellectual property or other rights held by Sinopower and other parties. Sinopower shall bear no responsible whatsoever for any dispute arising from the use of such technical information.

The products are not designed or manufactured to be used with any equipment, device or system which requires an extremely high level of reliability, such as the failure or malfunction of which any may result in a direct threat to human life or a risk of human injury. Sinopower shall bear no responsibility in any way for use of any of the products for the above special purposes. If a product is intended to use for any such special purpose, such as vehicle, military, or medical controller relevant applications, please contact Sinopower sales representative before purchasing.

Copyright © Sinopower Semiconductor Inc.

Classification Profile

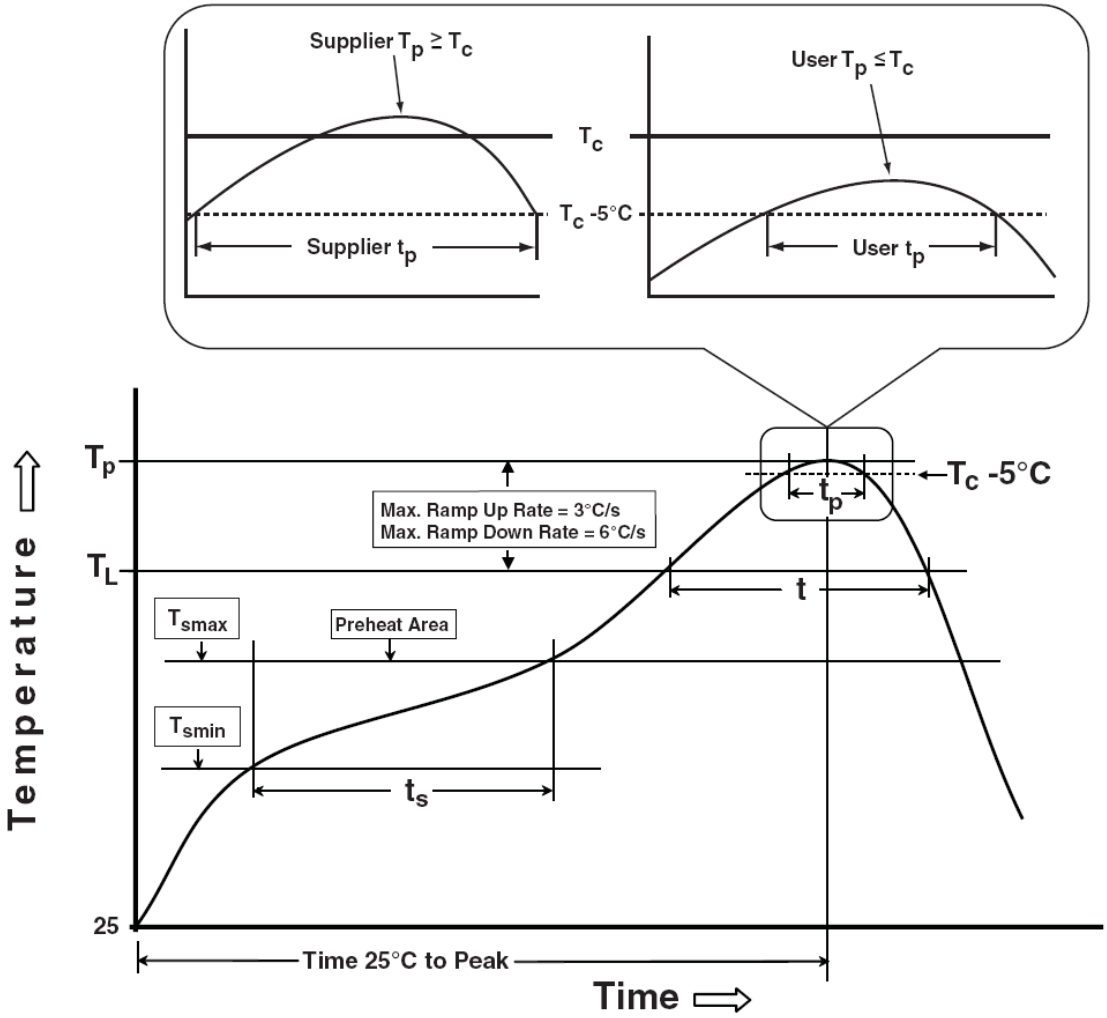

Classification Reflow Profiles

Profile Feature	Sn-Pb Eutectic Assembly	Pb-Free Assembly
Preheat & Soak Temperature min (T_{smin}) Temperature max (T_{smax}) Time (T_{smin} to T_{smax}) (t_s)	100 °C 150 °C 60-120 seconds	150 °C 200 °C 60-120 seconds
Average ramp-up rate (T_{smax} to T_P)	3 °C/second max.	3°C/second max.
Liquidous temperature (T_L) Time at liquidous (t_L)	183 °C 60-150 seconds	217 °C 60-150 seconds
Peak package body Temperature (T_p)*	See Classification Temp in table 1	See Classification Temp in table 2
Time (t_P)** within 5°C of the specified classification temperature (T_c)	20** seconds	30** seconds
Average ramp-down rate (T_p to T_{smax})	6 °C/second max.	6 °C/second max.
Time 25°C to peak temperature	6 minutes max.	8 minutes max.
* Tolerance for peak profile Temperature (T_p) is defined as a supplier minimum and a user maximum. ** Tolerance for time at peak profile temperature (t_p) is defined as a supplier minimum and a user maximum.		

Table 1. SnPb Eutectic Process – Classification Temperatures (Tc)

Package Thickness	Volume mm^3 <350	Volume mm^3 ≥350
<2.5 mm	235 °C	220 °C
≥2.5 mm	220 °C	220 °C

Table 2. Pb-free Process – Classification Temperatures (Tc)

Package Thickness	Volume mm^3 <350	Volume mm^3 350-2000	Volume mm^3 >2000
<1.6 mm	260 °C	260 °C	260 °C
1.6 mm – 2.5 mm	260 °C	250 °C	245 °C
≥2.5 mm	250 °C	245 °C	245 °C

Reliability Test Program

Test item	Method	Description
SOLDERABILITY	JESD-22, B102	5 Sec, 245°C
HTRB	JESD-22, A108	1000 Hrs, 80% of VDS max @ Tjmax
HTGB	JESD-22, A108	1000 Hrs, 100% of VGS max @ Tjmax
PCT	JESD-22, A102	168 Hrs, 100%RH, 2atm, 121°C
TCT	JESD-22, A104	500 Cycles, -65°C~150°C

Customer Service

Sinopower Semiconductor Inc.

5F, No. 6, Dusing 1St Rd., Hsinchu Science Park,
Hsinchu, 30078, Taiwan
TEL: 886-3-5635818 Fax: 886-3-5635080

Copyright © Sinopower Semiconductor Inc.